| Article | | | Length | Width | Height | DIN Rail for Terminals | | Mounting Plate Thickness | External Mounting Brackets | External Hinge Appr. 150°C |
|---|---|---|---|---|---|---|---|---|---|---|
| ABS | Polycarbonate | Polycarbonate with clear lid | (mm) | (mm) | (mm) | TS 15 | TS 35 | in mm | set | PC pair |
| 01 121209 000 | 02 121209 000 | 02 121209 045 | 122 | 120 | 85 | x | x | 2.0 | x | x |

lid

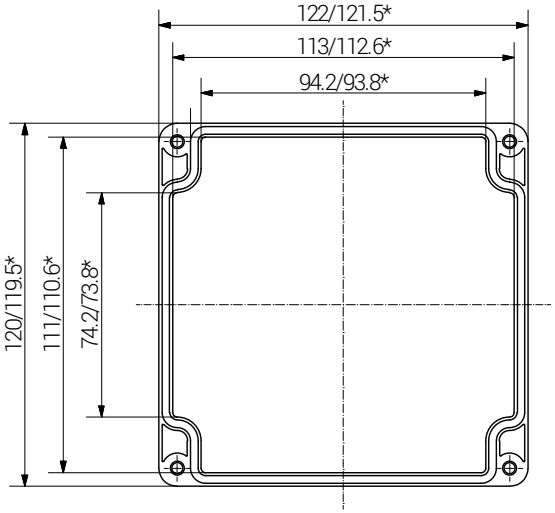


base

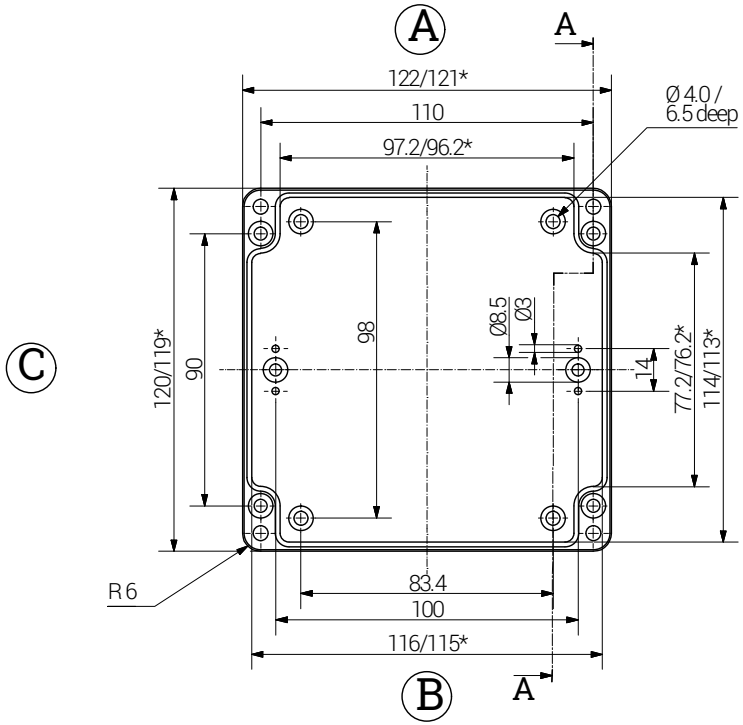


Section A-A

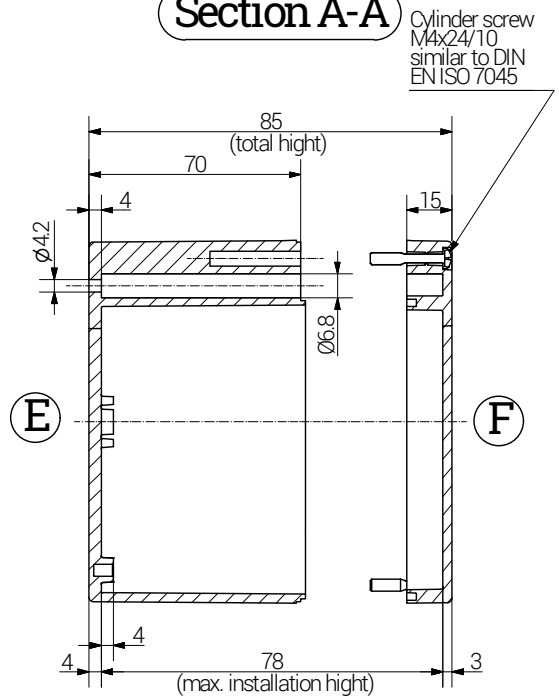


*= Dimension reduced at bottom due to conical form.
Tolerances to DIN 16901-130.

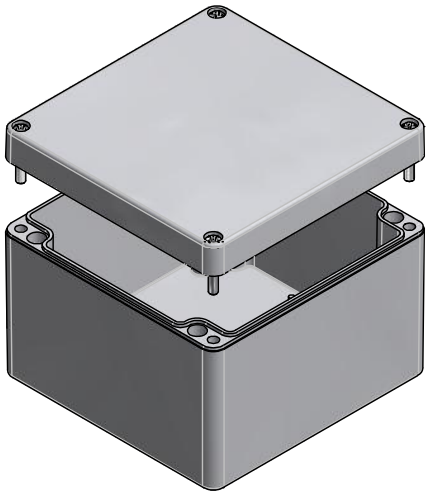

Weight: 300 g


**RST Rabe-System-Technik und Vertriebs-GmbH**
Otto-Lilienthal-Strasse 19
49134 Wallenhorst
+49 5407 8766-0
+49 5407 8766-99
info@rst.eu


Unless otherwise specified on the drawing:
Metric Thread = EN 60423
PG Thread = DIN 40430
NPT Thread = ANSI B1.20.1
Tolerence: DIN ISO 2768-m
All dimensions in mm.


Abusively use, in particular reproduction and dissemination to third parties is not permitted. You can be punished by civil law. Technical changes are reserved.


| | Date | Name |
|---|---|---|
| Draw. | 28.05.2018 | SL |
| Appr. | 28.05.2018 | KH |
| Norm | | |
| Scale: | | 1:2,5 |

# Enclosure
# 122 x 120 x 85 mm

Material: see table

Drawing-Nr.: see table

1 of 1

A4

| Status | Modification | Date | Name | Z:\Inventor\Gehäuse\Gehäuse-ABS\01121209000\ABS-Gehäuse-15-BG-0001-01_121209_000.idw | V8 |
|---|---|---|---|---|---|

Please note that the above representation is just a dimension illustration.