Article			Length	Width	Height	DIN Rail for Terminals		Mounting Plate Thickness	External Mounting Brackets	External Hinge Appr. 150°C
ABS	Polycarbonate	Polycarbonate with clear lid	(mm)	(mm)	(mm)	TS 15	TS 35	in mm	set	PC pair
01 201508 000	02 201508 000	02 201508 045	200	150	75	x	x	2.5	x	x

lid

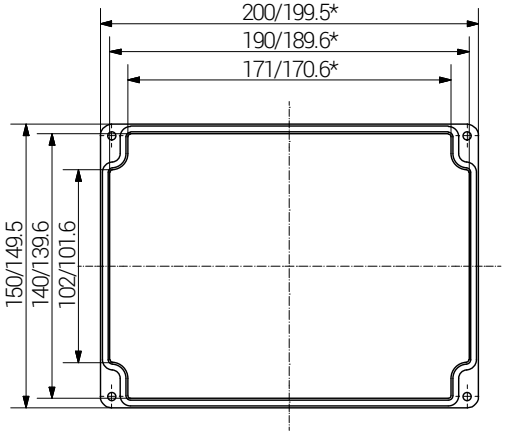

base

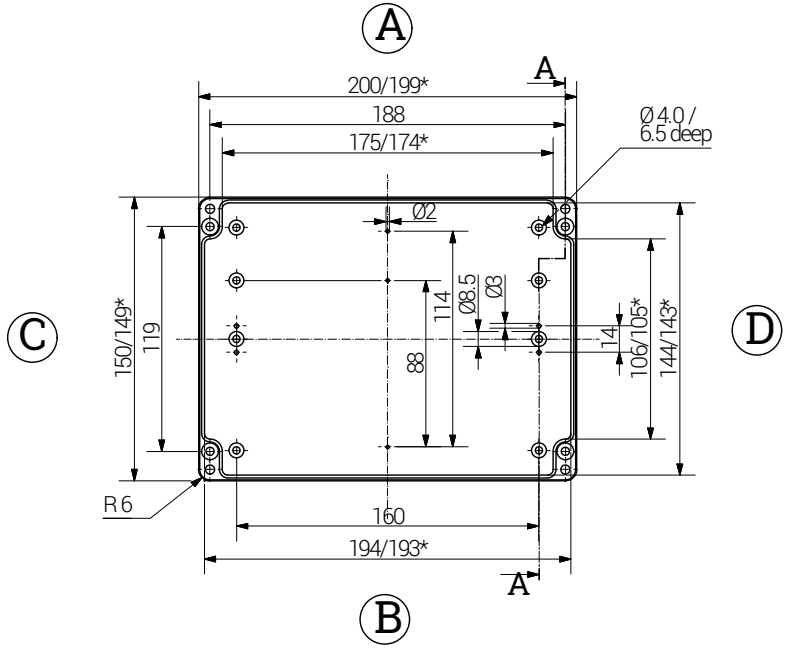

Section A-A

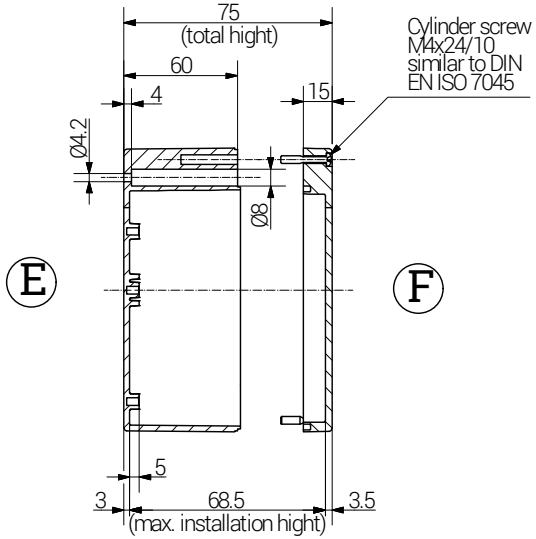

*= Dimension reduced at bottom due to conical form.
Tolerances to DIN 16901-130.

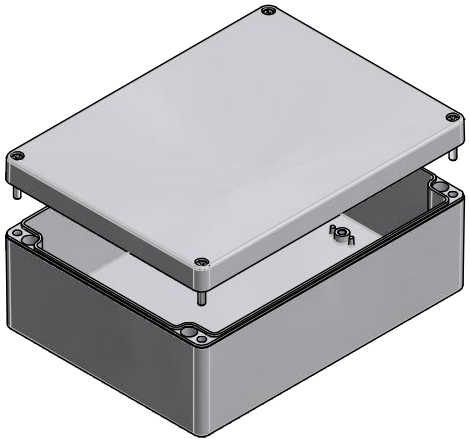

Weight: 525 g

RST Rabe-System-Technik und Vertriebs-GmbH
Otto-Lilienthal-Strasse 19
49134 Wallenhorst
+49 5407 8766-0
+49 5407 8766-99
info@rst.eu

Unless otherwise specified on the drawing:
Metric Thread = EN 60423
PG Thread = DIN 40430
NPT Thread = ANSI B1.20.1
Tolerence: DIN ISO 2768-m
All dimensions in mm.

Abusively use, in particular reproduction and dissemination to third parties is not permitted. You can be punished by civil law. Technical changes are reserved.

	Date	Name
Draw.	28.05.2018	SL
Appr.	28.05.2018	KH
Norm		
Scale:		1:4

Enclosure
200 x 150 x 75 mm

Material: see table

Drawing-Nr.: see table

1 of 1

A4

Status	Modification	Date	Name

Z:\Inventor\Gehäuse\Gehäuse-ABS\01201508000\ABS-Gehäuse-23-BG-0001-01_201508_000.idw

V10

Please note that the above representation is just a dimension illustration.