| Article | Length (mm) | Width (mm) | Height (mm) | DIN Rail for Terminals TS 15 | DIN Rail for Terminals TS 35 | Mounting Plate Thickness in mm | External Mounting Brackets in Stainless Steel set | External Hinge in Aluminium pair |
|---|---|---|---|---|---|---|---|---|
| 07 080806 010 | 80 | 75 | 55 | x | - | 2.0 b) | x | - |

b) Pertinax (Hartpapier)

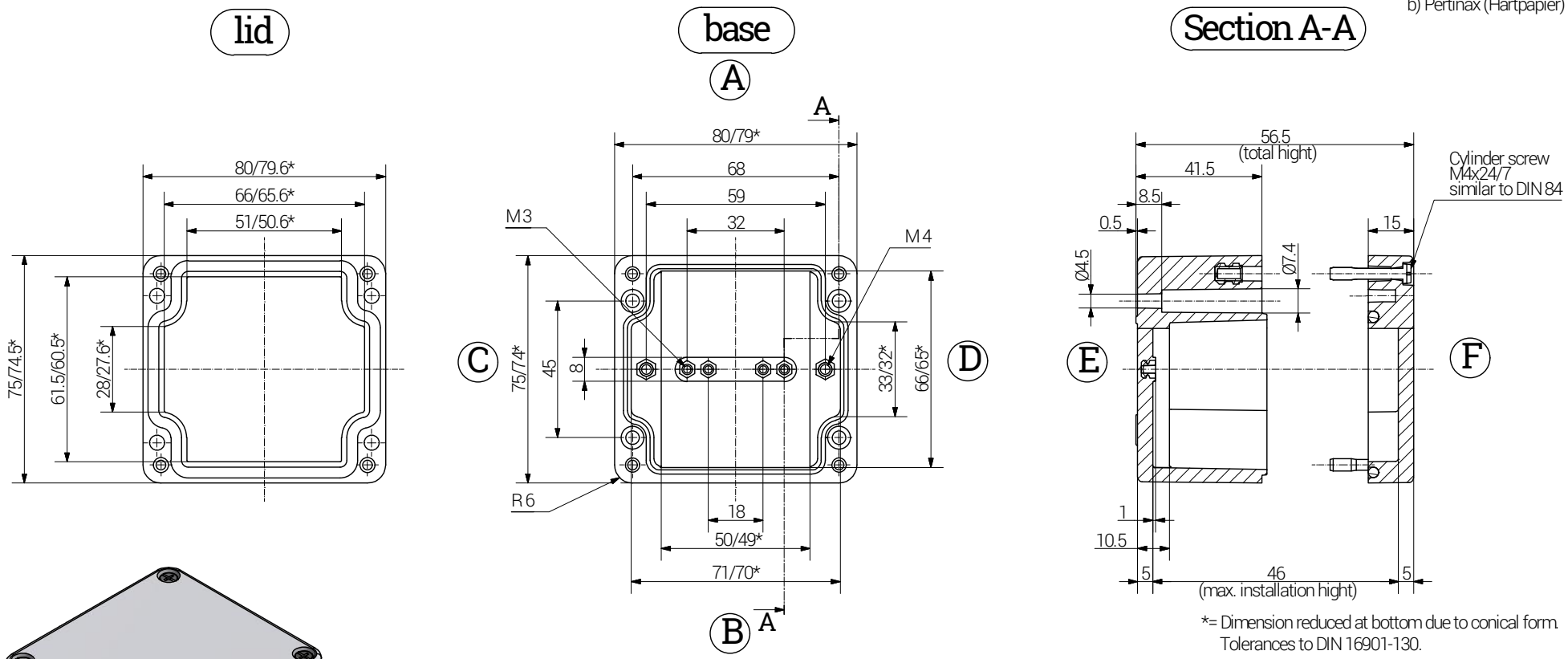


*= Dimension reduced at bottom due to conical form.
Tolerances to DIN 16901-130.

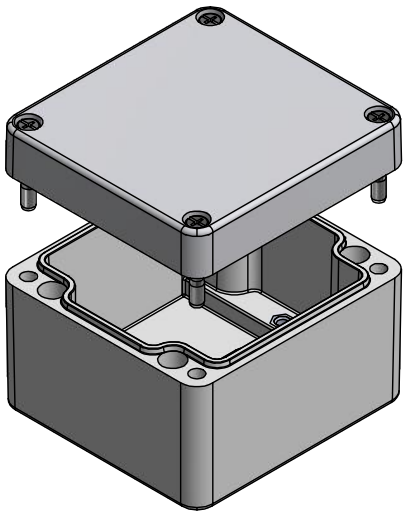

Weight: 230 g


**RST Rabe-System-Technik und Vertriebs-GmbH**
Otto-Lilienthal-Strasse 19
49134 Wallenhorst
+49 5407 8766-0
+49 5407 8766-99
info@rst.eu


Unless otherwise specified on the drawing:
Metric Thread = EN 60423
PG Thread = DIN 40430
NPT Thread = ANSI B1.20.1
Tolerence: DIN ISO 2768-m
All dimensions in mm.


Abusively use, in particular reproduction and dissemination to third parties is not permitted. You can be punished by civil law. Technical changes are reserved.


| | Date | Name |
|---|---|---|
| Draw. | 29.05.2018 | SL |
| Appr. | 29.05.2018 | KH |
| Norm | | |
| Scale: | | 1:2 |

# Enclosure
# 80 x 75 x 55 mm

Material: Polyester

Drawing-Nr.: 07 080806 010

1 of 1

A4

| Status | Modification | Date | Name |
|---|---|---|---|

Z:\Inventor\Gehäuse\Gehäuse-Polyester\07_080806_010\Polyester-Gehäuse-03-BG-0001-07_080806_010.idw

V41

Please note that the above representation is just a dimension illustration.