Article	Length (mm)	Width (mm)	Height (mm)	DIN Rail TS 15	DIN Rail TS 35	Earthing Rail, number of clamping pieces	Mounting Plate galv. Sheet steel Thickness in mm	External Mounting Brackets in set	External Hinge in Aluminium PC pair	Internal Hinges PC pair
09 130806 000	125	80	57	x	-	-	1.5	-	-	-

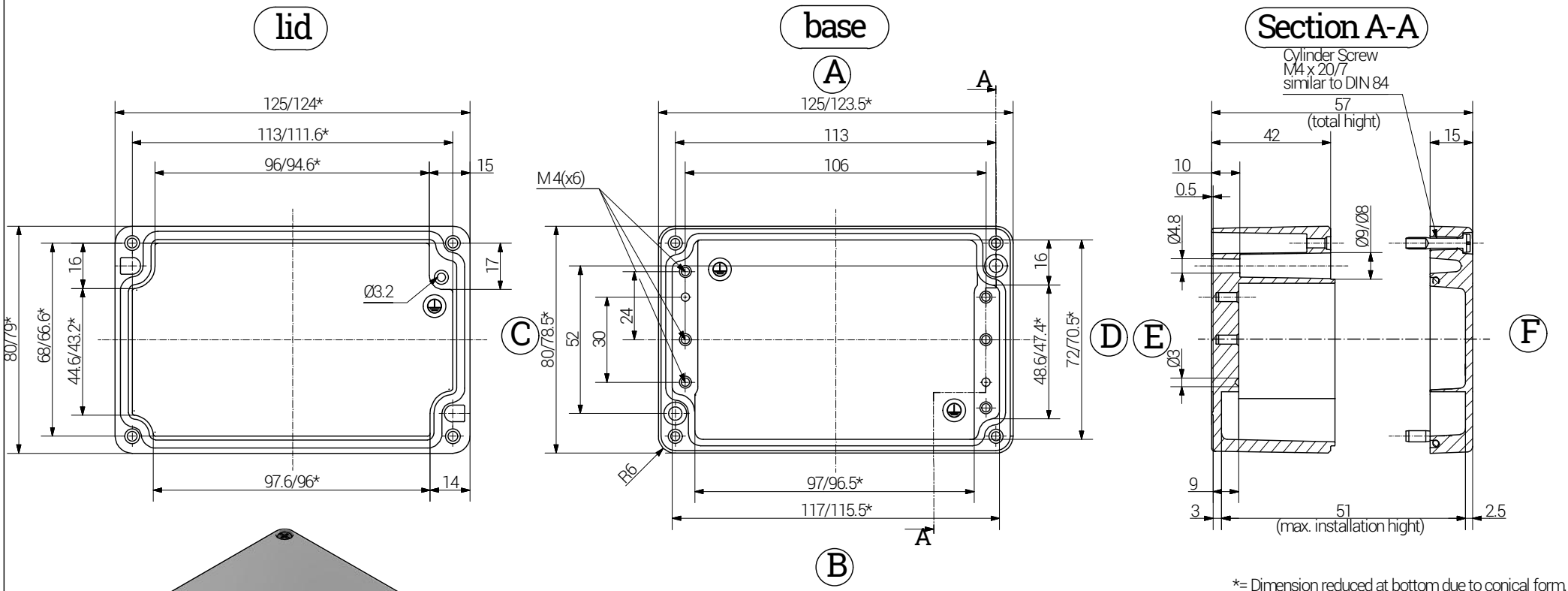

*= Dimension reduced at bottom due to conical form.
Tolerances to GTA 13/5 - DIN 1688.

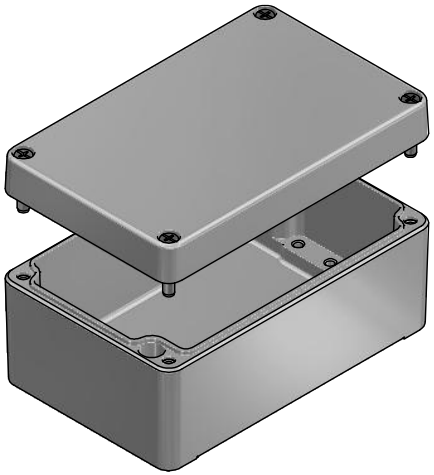

Weight: 355 g

RST Rabe-System-Technik und Vertriebs-GmbH
Otto-Lilienthal-Strasse 19
49134 Wallenhorst
+49 5407 8766-0
+49 5407 8766-99
info@rst.eu

Unless otherwise specified on the drawing:
Metric Thread = EN 60423
PG Thread = DIN 40430
NPT Thread = ANSI B1.20.1
Tolerence: DIN ISO 2768-m
All dimensions in mm.

Abusively use, in particular reproduction and dissemination to third parties is not permitted. You can be punished by civil law. Technical changes are reserved.

	Date	Name
Draw.	30.05.2018	SL
Appr.	30.05.2018	KH
Norm		
Scale:		1:2

Enclosure
125 x 80 x 57 mm

Material: Aluminium

Drawing-Nr.: 09 130806 000

1 of 1

A4

Status	Modification	Date	Name

Z:\Inventor\Gehäuse\Gehäuse-Aluminium\09130806000\Alu-Gehäuse-07-BG-0001-09_130806_000.idw

V9

Please note that the above representation is just a dimension illustration.